8MB500

High Output Midbass Transducer

Key Features

95 dB SPL 1W / 1m average sensitivity
51 mm (2 in) Interleaved Sandwich Voice coil (ISV)
400 Watt program power handling
Triple roll suspension for increased motion control
Weather protected tretaed cellulose cone
Lightweight diecast aluminum basket design
Suitable for compact two way and multiway systems

General Description

The 8MB500 mid-bass transducer has been developed in response to a specific market requirement for a 200 mm (8 in) midbass driver which combines excellent linearity with good efficiency and power handling capabilities. It is primarily intended for use as a midbass driver in compact 2-way reflex enclosures with a 1 inch compression driver or tweeter but as a result of its versatile characteristics, it can also be used in multiway systems.
The curvilinear, treated paper cone is formed using a unique wood pulp composition designed to achieve the best possible rigidity and stiffness. This is carried by a polycotton multiroll surround to provide increased excursion whilst controlling break up modes.
The 50 mm (2 inch) aluminum wire voice coil employs same Interleaved Sandwich Voice coil (ISV) technology. It is composed of a high strength fiberglas former carrying windings on both the outer and inner surfaces to achieve a mass balanced coil. This results in an extremely linear motor assembly which, in conjunction with the highly advanced design of the magnetic structure, provides a high force factor or BL.
The voice coil is cooled by incorporating airways between the chassis back plate and the magnetic top plate to channel heated air away from the voice coil and gap and dissipate it.
In-house FEA CAD facilities have been used to optimise flux density and BL factor within the air gap.
Due to the increasing use of sound systems at outdoor events, the 8MB500 ability to perform in humid environments is a key feature. This has been achieved using an exclusive cone treatment which renders the cone resistant to humidity.

0220889000 8 Ohm	0270889000 R-kit 8 Ohm
0220869000 16 Ohm	0270869000 R-kit 16 Ohm
0220849000 4 Ohm	0270849000 R-kit 4 Ohm

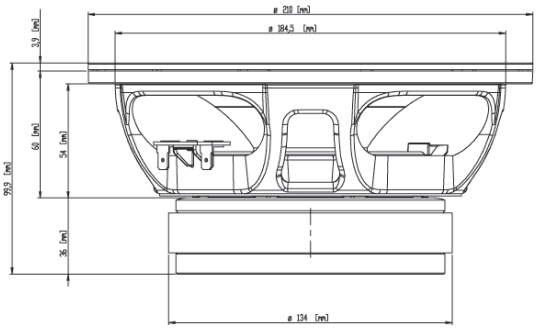

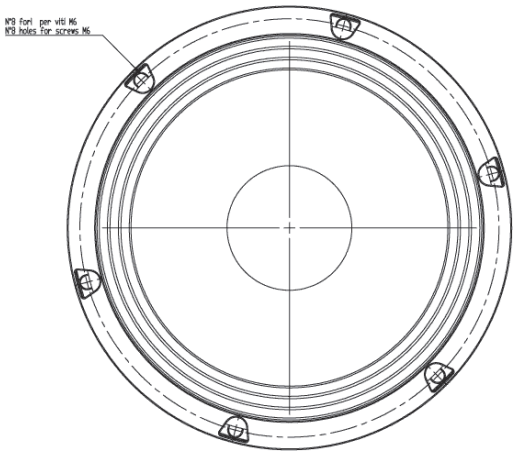

FERRITE LF-MB-MF TRANSDUCERS

info@eighteensound.com
www.eighteensound.com

8MB500

High Output Midbass Transducer

GENERAL SPECIFICATIONS

NOMINAL DIAMETER	200 mm (8 in)
RATED IMPEDANCE	8 Ohm
AES POWER (1)	280 W
PROGRAM POWER (2)	400 W
PEAK POWER (3)	800 W
SENSITIVITY (4)	95 dB
FREQUENCY RANGE (5)	60 ÷ 4500 Hz
POWER COMPRESSION @-10DB (6)	0,5 dB
POWER COMPRESSION @-3DB	1,4 dB
POWER COMPRESSION @FULL POWER	2,3 dB
MAX RECOMM. FREQUENCY	3000 Hz
RECOMM. ENCLOSURE VOLUME	10 ÷ 40 lt. (0,35 ÷ 1,41 cuft)
MINIMUM IMPEDANCE	5,8 Ohm at 25°C
MAX PEAK TO PEAK EXCURSION	19 mm (0,75 in)
VOICE COIL DIAMETER	51 mm (2 in)
VOICE COIL WINDING MATERIAL	aluminum
SUSPENSION	Triple-roll, Polycotton
CONE	Curvilinear, Treated cellulose

THIELE SMALL PARAMETERS (7)

Fs	74 Hz
Re	5,1 Ohm
Sd	0,023 sq.mt. (35,65 sq.in.)
Qms	2,66
Qes	0,51
Qts	0,43
Vas	21,5 lt. (0,76 cuft)
Mms	17 gr. (0,04 lb)
BL	9,0 Tm
Linear Mathematical Xmax (8)	± 6 mm (± 0,24 in)
Le (1kHz)	0,60 mH
Ref. Efficiency 1W@1m (half space)	94,4 dB

MOUNTING INFORMATIONS

Overall diameter	210 mm (8,27 in)
N. of mounting holes	6
Mounting holes diameter	6 mm (0,23 in)
Bolt circle diameter	195 - 198 mm (7,68 - 7,80 in)
Front mount baffle cutout ø	186 mm (7,32 in)
Rear mount baffle cutout ø	184 mm (7,24 in)
Total depth	99,5 mm (3,92 in)
Flange and gasket thickness	14,5 mm (0,57 in)
Net weight	3,4 kg (7,5 lb)
Shipping weight	3,72 kg (8,22 lb)
CardBoard Packaging dimensions	235 x 235 x 150 mm (9,25 x 9,25 x 5,91 in)

FREQUENCY RESPONSE CURVE OF 8MB500 MADE ON 25 LIT. ENCLOSURE TUNED 65HZ IN FREE FIELD (4PI) ENVIRONMENT. ENCLOSURE CLOSES THE REAR OF THE DRIVER. THE THIN LINE REPRESENTS 45 DEG. OFF AXIS FREQUENCY RESPONSE

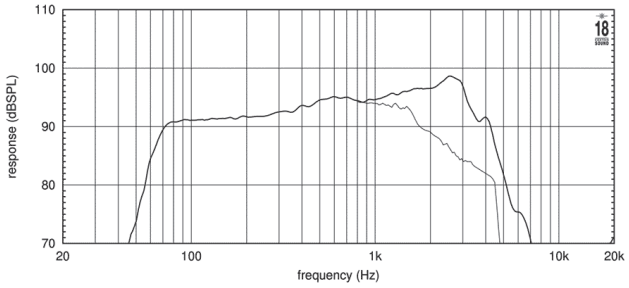

FREE AIR IMPEDANCE MAGNITUDE CURVE

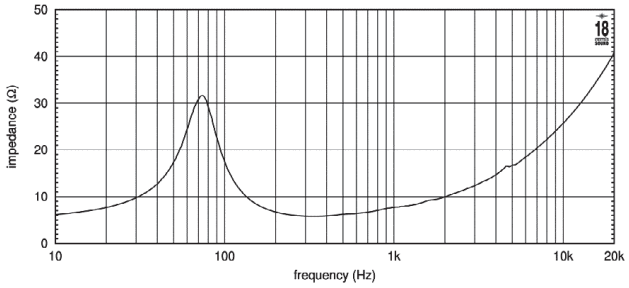

NOTES

(1) AES power is determined according to AES2-1984 (r2003) standard

(2) Program power rating is measured in 25 lit enclosure tuned 65Hz using a 60 - 2000Hz band limited pink noise test signal with 50% duty cycle, applied for 2 hours.

(3) The peak power rating represents the maximum permitted instantaneous peak power level over a maximum period of 10ms which will be withstood by the loudspeaker without damage.

(4) Sensitivity represents the averaged value of acoustic output as measured on the forward central axis of cone, at distance 1m from the baffle panel, when connected to 2,83V sine wave test signal swept between 500Hz and 2500Hz with the test specimen mounted in the same enclosure as given for (1) above.

(5) Frequency range is given as the band of frequencies delineated by the lower and upper limits where the output level drops by 10 dB below the rated sensitivity in half space environment.

(6) Power compression represents the loss of sensitivity for the specified power, measured from 50-500 Hz, after a 5 min pink noise preconditioning test at the specified power.

(7) Thiele - Small parameters are measured after the test specimen has been conditioned by AES power and represent the expected long term parameters after a short period of use.

(8) Linear Math. Xmax is calculated as (Hvc-Hg)/2 + Hg/4 where Hvc is the coil depth and Hg is the gap depth.

Eighteen Sound engages in research and product improvement. New materials and design refinements can be introduced into existing products without notice.